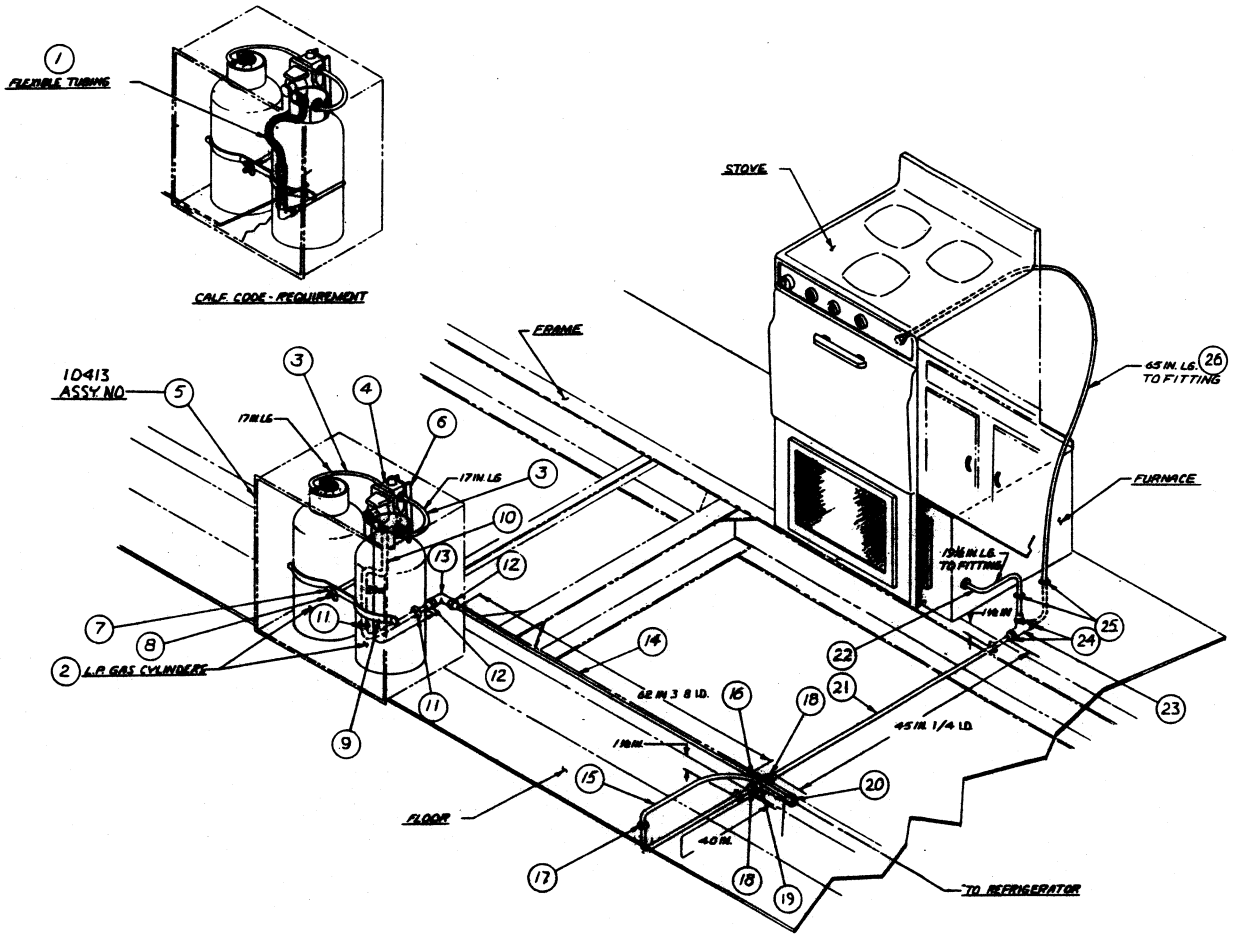

26	10439	TUBING-COPPER 1/4 in I.D. X 65 LG.		1	
25	22201	GROMMET-RUBBER		1	
24	10091	FLARE NUTS		1	
23	10050	TEE-FLARE		1	
22	10439	TUBING-COPPER 1/4 in I.D. 19 in LG.		1	
21	10439	TUBING-COPPER 3/8 - 45 in LG.		1	
20	10091	FLARE NUT		1	
19	10050	TEE-FLARE		1	
18	10091	FLARE NUTS		2	
17	22201	GROMMET-RUBBER		1	
16	10245	FLARE NUT 3/8		1	
15	10439	3/8 - 30 LG COPPER TUBING		1	
14	10439	3/8 COPPER TUBING 62 in LG.		1	
13	10071	1/4 - FLARE		1	
12	10091	FLARE NUTS		2	
11	22201	GROMMET-RUBBER		2	
10	10439	TUBING-COPPER 3/8 I.D. 21" LG.		1	
9	1312	1/4 RETAINING BRKT.		1	
8	10086	BOLT		1	
7	22086	1/4 NUT		1	
6	10411	BRKT-REG. LPG MTG.		1	
5	10413	BRKT-CYLINDER		1	
4	10288	LP GAS REGULATOR		1	
3	10431	LINE-LPG BOTTLE CONN.		2	
2	10308	CYLINDER-LP GAS		2	
1	10100	FLEXIBLE TUBING-CALIF. CODE		1	
ITEM NO.	DRAWING NO.	DESCRIPTION	MATL.	NO. REQ'D	REMARKS

This drawing is the property of TRAVCO CORPORATION. This drawing is loaned to the recipient firm to be not to be reproduced or copied and to not to be used, directly or indirectly, in the making of drawings, prints, patterns or other thereof, without written permission. The possession of this drawing will be taken as the consent of the foregoing conditions and to be subject to the action of the courts assumed by TRAVCO CORPORATION.

TRAVCO CORPORATION

DODGE SIXTEEN SERIES
DODGE COMMERCIAL TRAVELER

LP GAS LINE PICTORIAL

10489